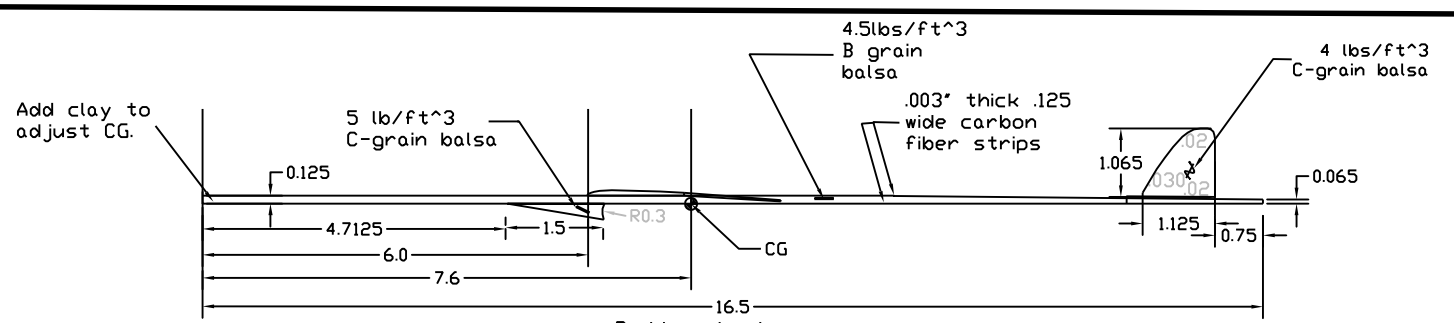

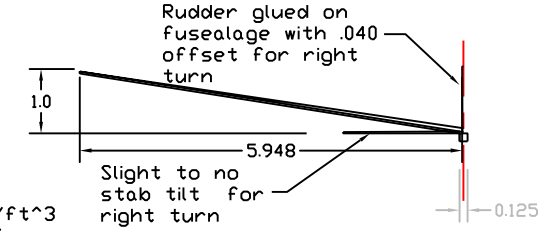

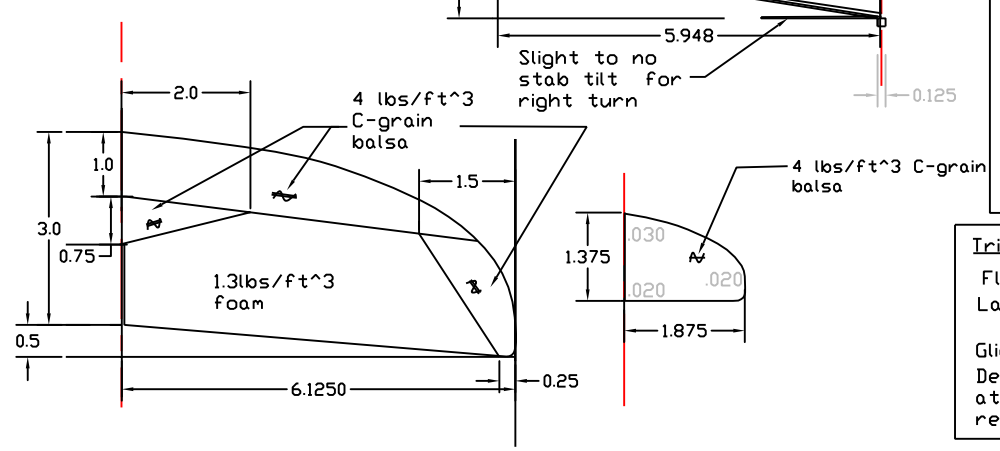

Weight Table (in grams +-.05)	
Wing	1.5
Fuselage	0.4
Stab	0.1
Rudder	0.05
Launch Hook	0.1
Ballast Clay	0.05
Total	2.2g

Trim/Flight Notes

Flight Pattern---> Right-Right

Launch Rubber ---> .040"wide X 10.5" loop of FAI Super Sport

Glide Circle Radius approx 50 ft

Decalage adjustment for straight launch at wing to fuselage joint (use acetone to remove/shim/reglue

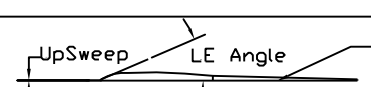

Sand wing on flat surface, bend foam flap after glued on fuselage

Wing Airfoil Parameter Sanding Table

Span Location	0	1.516	3.031	4.547	6.000
Chord	3.000	3.000	2.910	2.493	1.080
High Point (HP)thickness	0.066	0.066	0.064	0.055	0.025
HP to Leading Edge (LE)	0.900	0.900	0.873	0.748	0.324
Foam Flap Chord	1.250	1.549	1.871	1.805	N/A
Thickness at LE of flap	0.030	0.037	0.044	0.035	N/A
UpSweep	0.010	0.010	0.010	0.010	0.010
LE Radius	0.010	0.010	0.010	0.010	0.010
Trailing Edge (TE) thickness	0.020	0.020	0.020	0.020	0.020
LE Angle	23	23	23	23	23

Glue joints

Launch hook to fuselage	CA
Dihedral wing joint	CA
Foam to balsa joints	Weldbond
All other joints	Duco Cement thinned 50%

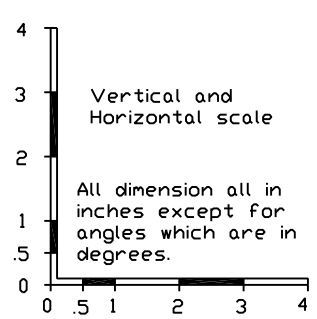

Vertical and Horizontal scale

All dimension all in inches except for angles which are in degrees.

Rantoul Special-2018

K. Krempetz

1st Place-2018 US Nationals

Best Two flight total Time:
1 minutes 47.6 seconds
Launch Height approx. 42 ft